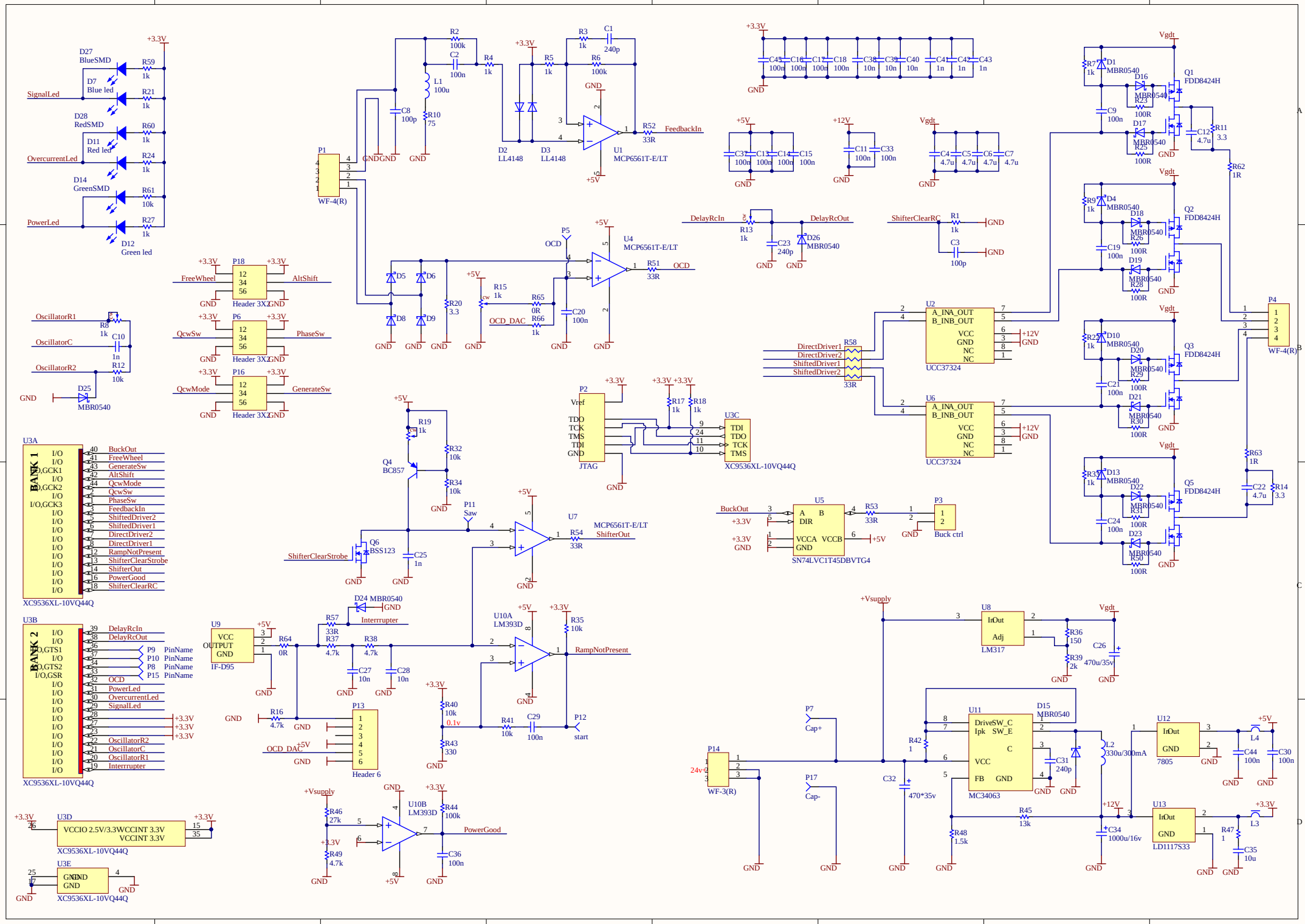
D27 BlueSMD
D7 Blue led
D28 RedSMD
D11 Red led
D14 GreenSMD
D12 Green led
SignalLed
OvercurrentLed
PowerLed
R59 1k
R21 1k
R60 1k
R24 1k
R61 10k
R27 1k
+3.3V
P1
WF-4(R)
R2 100k
C2 100n
R4 1k
L1 100u
C8 100p
R10 75
R3 1k
C1 240p
R5 1k
R6 100k
D2 LL4148
D3 LL4148
U1 MCP6561T-E/LT
R52 33R
FeedbackIn
GND
+5V
C45 100n
C16 100n
C17 100n
C18 100n
C38 10n
C39 10n
C40 10n
C41 1n
C42 1n
C43 1n
C37 100n
C13 100n
C14 100n
C15 100n
C11 100n
C33 100n
+12V
C4 4.7u
C5 4.7u
C6 4.7u
C7 4.7u
Vgdt
DelayRcIn
R13 1k
C23 240p
D26 MBR0540
DelayRcOut
ShifterClearRC
R1 1k
C3 100p
P5
OCD
U4 MCP6561T-E/LT
R51 33R
D5
D6
D8
D9
R20 3.3
R15 1k
R65 0R
R66 1k
OCD_DAC
C20 100n
P18
FreeWheel
AltShift
Header 3X2
P6
QcwSw
PhaseSw
P16
QcwMode
GenerateSw
OscillatorR1
R8 1k
OscillatorC
C10 1n
OscillatorR2
R12 10k
D25 MBR0540
U3A
BANK 1
I/O
I/O,GCK1
I/O,GCK2
I/O,GCK3
BuckOut
FreeWheel
GenerateSw
AltShift
QcwMode
QcwSw
PhaseSw
FeedbackIn
ShiftedDriver2
ShiftedDriver1
DirectDriver2
DirectDriver1
RampNotPresent
ShifterClearStrobe
ShifterOut
PowerGood
ShifterClearRC
XC9536XL-10VQ44Q
U3B
BANK 2
I/O,GTS1
I/O,GTS2
I/O,GSR
DelayRcIn
DelayRcOut
P9 PinName
P10 PinName
P8 PinName
P15 PinName
OCD
PowerLed
OvercurrentLed
SignalLed
OscillatorR2
OscillatorC
OscillatorR1
Interrrupter
U3D
VCCIO 2.5V/3.3V
VCCINT 3.3V
U3E
GND
R19 1k
Q4 BC857
R32 10k
R34 10k
Q6 BSS123
ShifterClearStrobe
C25 1n
P11 Saw
U7 MCP6561T-E/LT
R54 33R
ShifterOut
D24 MBR0540
Interrrupter
R57 33R
U9 IF-D95
VCC
OUTPUT
GND
R64 0R
R37 4.7k
R38 4.7k
C27 10n
C28 10n
U10A LM393D
R35 10k
RampNotPresent
R16 4.7k
P13
Header 6
OCD_DAC
R40 10k
0.1v
R43 330
R41 10k
C29 100n
P12
start
+Vsupply
R46 27k
R49 4.7k
U10B LM393D
R44 100k
PowerGood
C36 100n
P2
Vref
TDO
TCK
TMS
TDI
GND
JTAG
R17 1k
R18 1k
U3C
TDI
TDO
TCK
TMS
XC9536XL-10VQ44Q
U5
A
B
DIR
VCCA
VCCB
GND
SN74LVC1T45DBVTG4
R53 33R
P3
Buck ctrl
U2
A_INA_OUT
B_INB_OUT
VCC
GND
NC
UCC37324
U6
DirectDriver1
DirectDriver2
ShiftedDriver1
ShiftedDriver2
R58 33R
Q1 FDD8424H
Q2 FDD8424H
Q3 FDD8424H
Q5 FDD8424H
D1 MBR0540
D16 MBR0540
D17 MBR0540
D4 MBR0540
D18 MBR0540
D19 MBR0540
D10 MBR0540
D20 MBR0540
D21 MBR0540
D13 MBR0540
D22 MBR0540
D23 MBR0540
R23 100R
R25 100R
R26 100R
R28 100R
R29 100R
R30 100R
R31 100R
R50 100R
R7 1k
R9 1k
R27 1k
R32 1k
C9 100n
C19 100n
C21 100n
C24 100n
R11 3.3
C12 4.7u
R62 1R
R63 1R
C22 4.7u
R14 3.3
P4
WF-4(R)
U8 LM317
InOut
Adj
R36 150
R39 2k
C26 470u/35v
P7
Cap+
P17
Cap-
P14
24v
WF-3(R)
U11 MC34063
DriveSW_C
Ipk
SW_E
C
VCC
FB
GND
D15 MBR0540
R42 1
C32 470*35v
C31 240p
L2 330u/300mA
R48 1.5k
R45 13k
C34 1000u/16v
U12 7805
L4
C44 100n
C30 100n
U13 LD1117S33
L3
R47 1
C35 10u

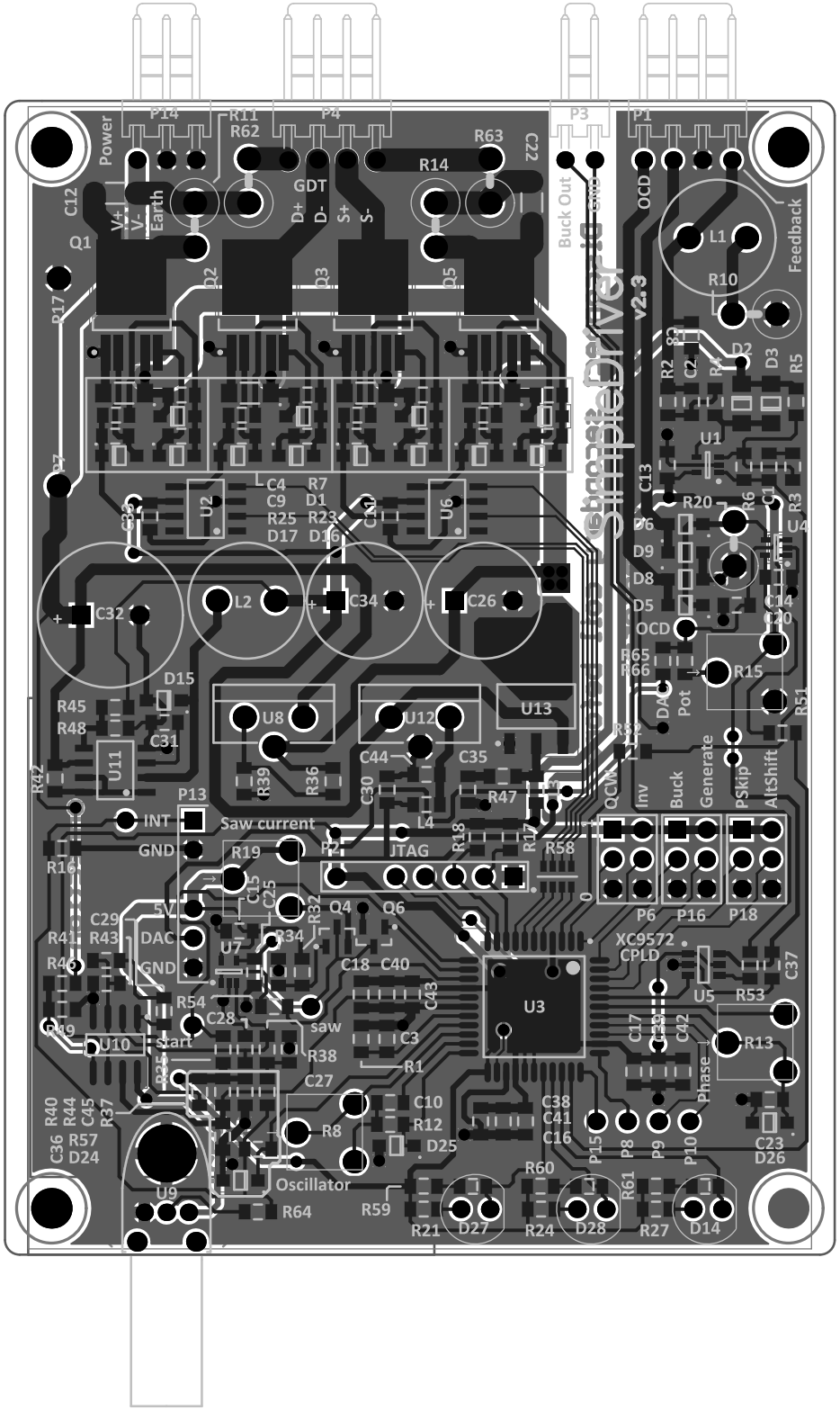

Power
P14
R11
R62
P4
R63
C22
P3
P1
R14
GDT
D+
D-
S+
S-
Buck Out
GND
OCD
Feedback
C12
V+
V-
Earth
Q1
Q2
Q3
Q5
L1
R10
R17
R2
C2
R4
D2
D3
R5
U1
C13
R20
R6
C1
R3
U4
D6
D9
D8
D5
OCD
C14
C20
R65
R66
R15
R51
DAC
Pot
R52
QCW
Inv
Buck
Generate
PSkip
AltShift
P6
P16
P18
C4
R7
C9
D1
R25
R23
D17
D16
U2
U6
C33
C32
L2
C34
C26
D15
R45
R48
C31
U8
U12
U13
U11
R42
R39
R36
C44
C35
C30
R47
P13
INT
Saw current
GND
R19
P2
JTAG
R18
R17
R58
R16
C15
C25
R32
Q4
Q6
C29
R43
DAC
R41
R46
GND
U7
R34
C18
C40
XC9572
CPLD
C37
U5
R53
R54
C28
saw
C43
U3
C17
C39
C42
R13
R49
U10
start
R38
C3
R1
R25
C27
Phase
R40
R44
C45
R37
C10
R12
C38
C41
C16
C36
R57
D24
R8
D25
P15
P8
P9
P10
C23
D26
Oscillator
R60
R61
U9
R64
R59
R21
D27
R24
D28
R27
D14