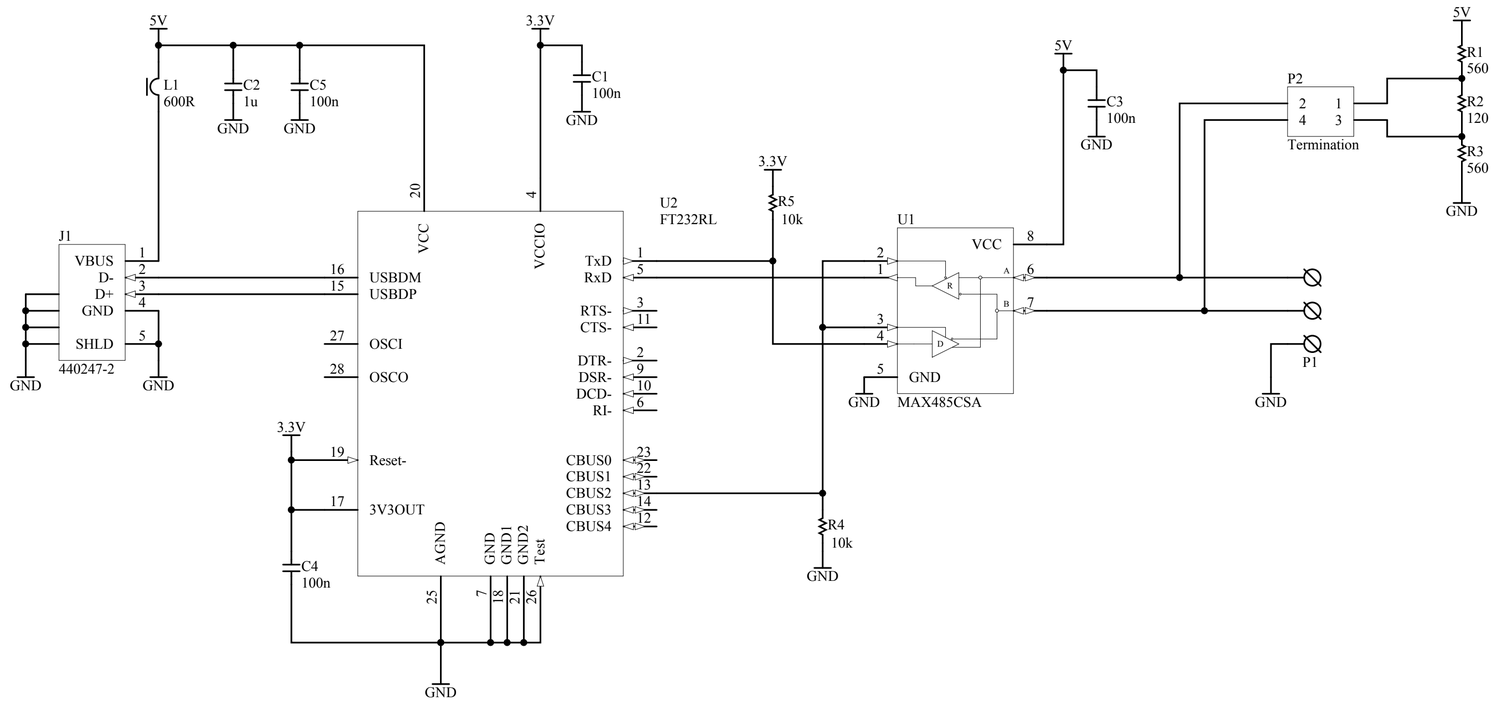
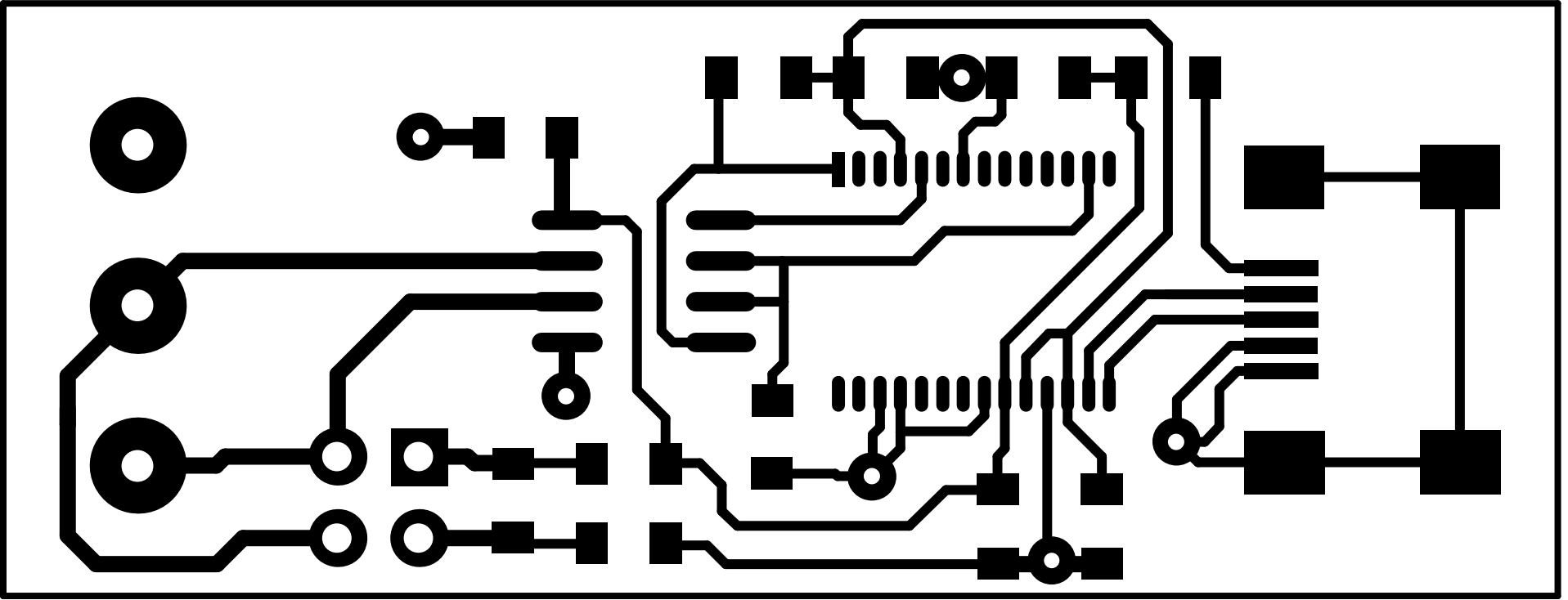
Project: NoName	**BSVi**
Title:	
Sheet of Date: 11.03.2011 Time: 20:38:03