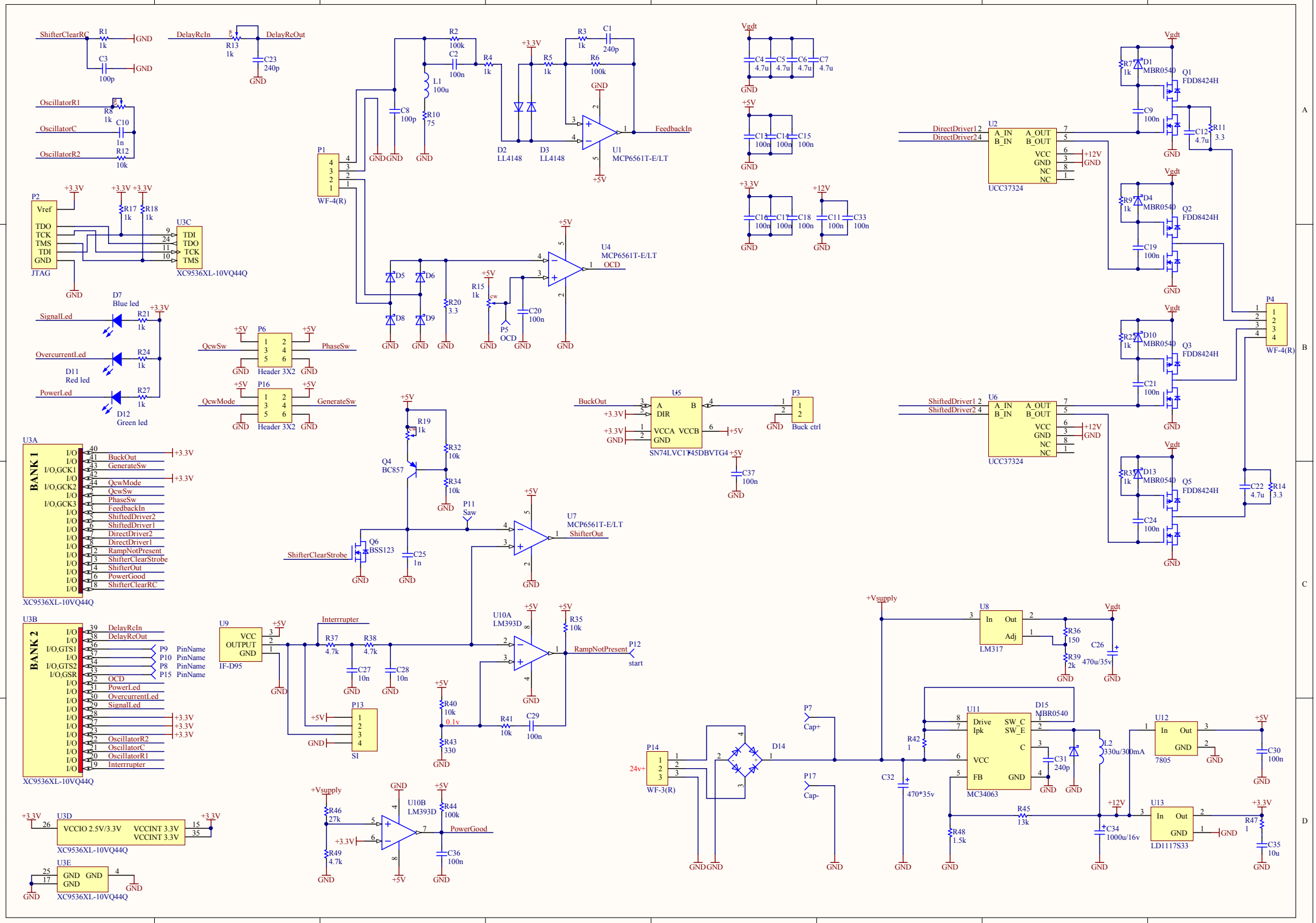
ShifterClearRC
R1 1k
GND
C3 100p
DelayRcIn
R13 1k
DelayRcOut
C23 240p
OscillatorR1
R8 1k
OscillatorC
C10 1n
OscillatorR2
R12 10k
P2
Vref
TDO
TCK
TMS
TDI
GND
JTAG
+3.3V
R17 1k
R18 1k
U3C
TDI
TDO
TCK
TMS
XC9536XL-10VQ44Q
D7 Blue led
SignalLed
R21 1k
OvercurrentLed
R24 1k
D11 Red led
PowerLed
R27 1k
D12 Green led
+5V
P6
QcwSw
PhaseSw
Header 3X2
P16
QcwMode
GenerateSw
U3A
BANK 1
I/O
I/O,GCK1
I/O,GCK2
I/O,GCK3
BuckOut
GenerateSw
QcwMode
QcwSw
PhaseSw
FeedbackIn
ShiftedDriver2
ShiftedDriver1
DirectDriver2
DirectDriver1
RampNotPresent
ShifterClearStrobe
ShifterOut
PowerGood
ShifterClearRC
XC9536XL-10VQ44Q
U3B
BANK 2
I/O,GTS1
I/O,GTS2
I/O,GSR
DelayRcIn
DelayRcOut
P9 PinName
P10 PinName
P8 PinName
P15 PinName
OCD
PowerLed
OvercurrentLed
SignalLed
OscillatorR2
OscillatorC
OscillatorR1
Interrrupter
XC9536XL-10VQ44Q
U3D
VCCIO 2.5V/3.3V
VCCINT 3.3V
VCCINT 3.3V
XC9536XL-10VQ44Q
U3E
GND GND
GND
XC9536XL-10VQ44Q
P1
WF-4(R)
R2 100k
C2 100n
R4 1k
L1 100u
C8 100p
R10 75
R3 1k
C1 240p
R5 1k
R6 100k
D2 LL4148
D3 LL4148
U1 MCP6561T-E/LT
FeedbackIn
D5
D6
D8
D9
R20 3.3
R15 1k
P5 OCD
C20 100n
U4 MCP6561T-E/LT
OCD
R19 1k
Q4 BC857
R32 10k
R34 10k
P11 Saw
Q6 BSS123
C25 1n
U7 MCP6561T-E/LT
ShifterOut
U9
VCC
OUTPUT
GND
IF-D95
Interrrupter
R37 4.7k
R38 4.7k
C27 10n
C28 10n
P13
SI
U10A LM393D
R35 10k
RampNotPresent
P12 start
R40 10k
0.1v
R43 330
R41 10k
C29 100n
+Vsupply
R46 27k
R49 4.7k
U10B LM393D
R44 100k
PowerGood
C36 100n
Vgdt
C4 4.7u
C5 4.7u
C6 4.7u
C7 4.7u
C13 100n
C14 100n
C15 100n
C16 100n
C17 100n
C18 100n
C11 100n
C33 100n
+12V
U5
A
B
DIR
VCCA
VCCB
GND
SN74LVC1T45DBVTG4
BuckOut
P3
Buck ctrl
C37 100n
U2
A_IN
B_IN
A_OUT
B_OUT
VCC
GND
NC
UCC37324
DirectDriver1 2
DirectDriver2 4
R7 1k
D1 MBR0540
Q1 FDD8424H
C9 100n
C12 4.7u
R11 3.3
R9 1k
D4 MBR0540
Q2 FDD8424H
C19 100n
R22 1k
D10 MBR0540
Q3 FDD8424H
C21 100n
R35 1k
D13 MBR0540
Q5 FDD8424H
C24 100n
P4
WF-4(R)
C22 4.7u
R14 3.3
U6
ShiftedDriver1 2
ShiftedDriver2 4
P14
24v+
WF-3(R)
D14
P7
Cap+
P17
Cap-
C32 470*35v
+Vsupply
U8
In
Out
Adj
LM317
R36 150
R39 2k
C26 470u/35v
U11
Drive
Ipk
SW_C
SW_E
VCC
FB
GND
MC34063
D15 MBR0540
R42 1
C31 240p
L2 330u/300mA
R48 1.5k
R45 13k
C34 1000u/16v
U12
7805
C30 100n
U13
LD1117S33
R47 1
C35 10u