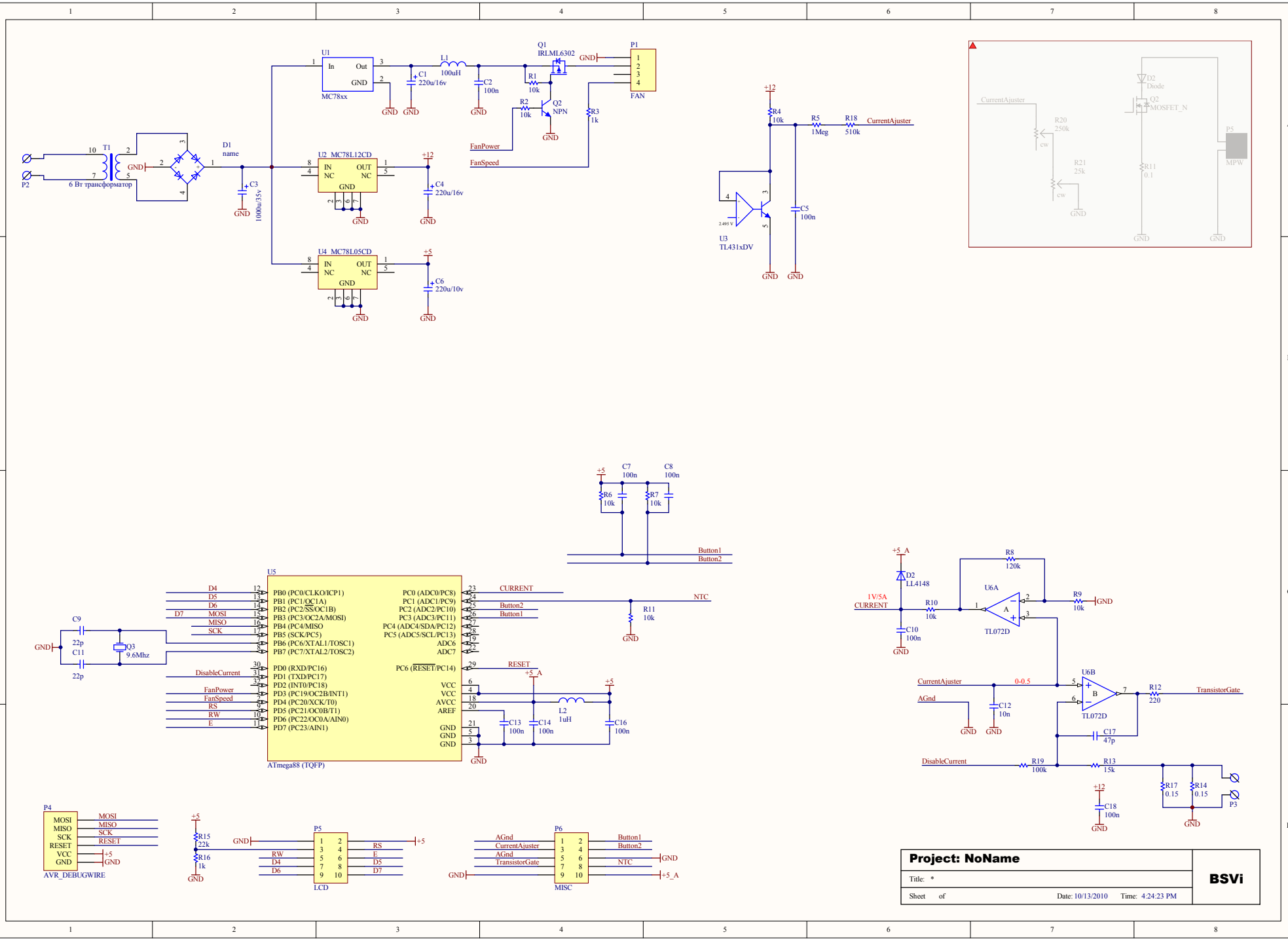

Project: NoName

Title: *

Sheet of

Date: 10/13/2010 Time: 4:24:23 PM

BSVi