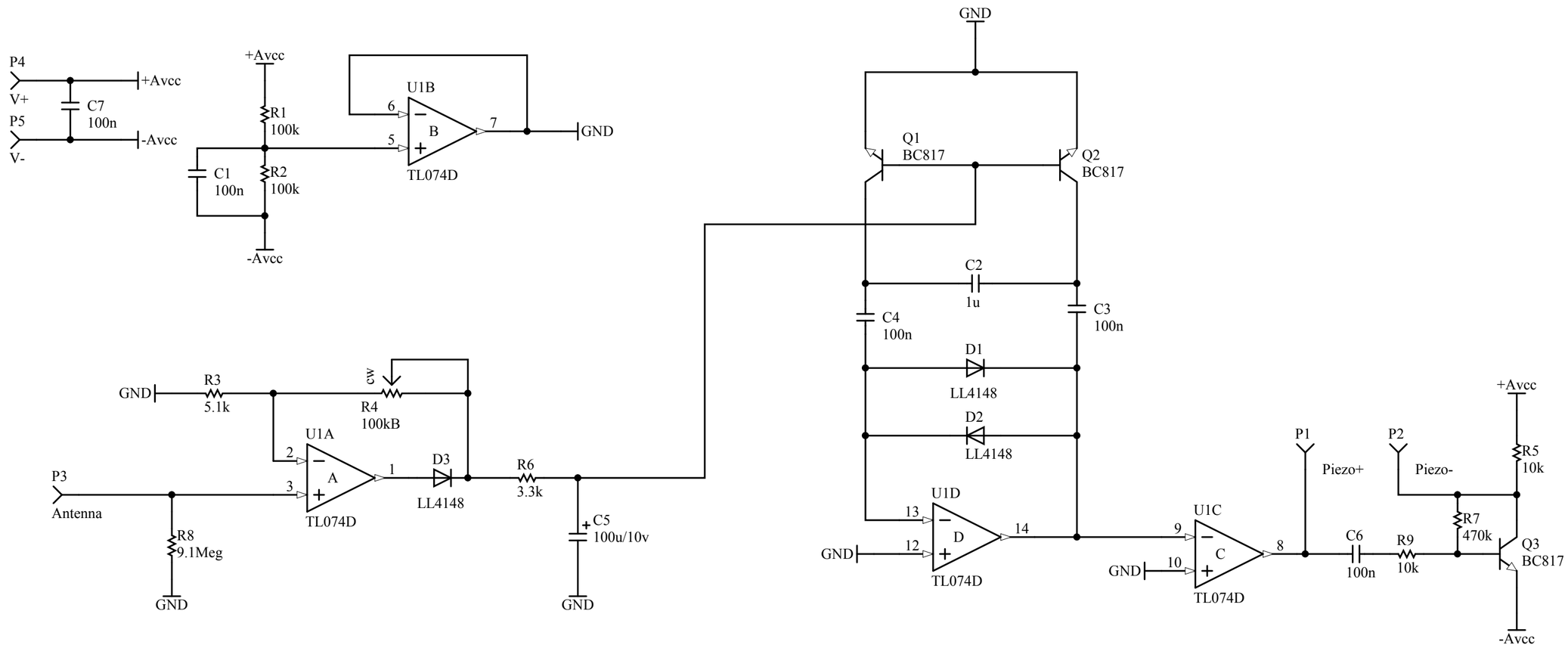

Project: Hidden wire detector	**BSVi**
Sheet: *	
Sheet * of * Date: 1/2/2010 Time: 12:17:07 PM	

voltage source
rev. A
out
osaig
+
-

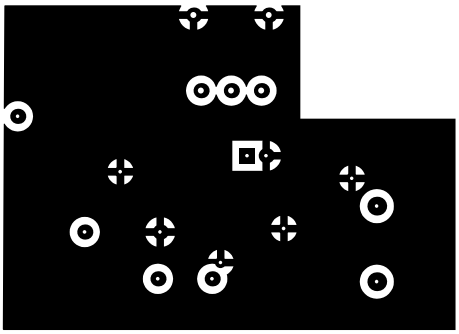

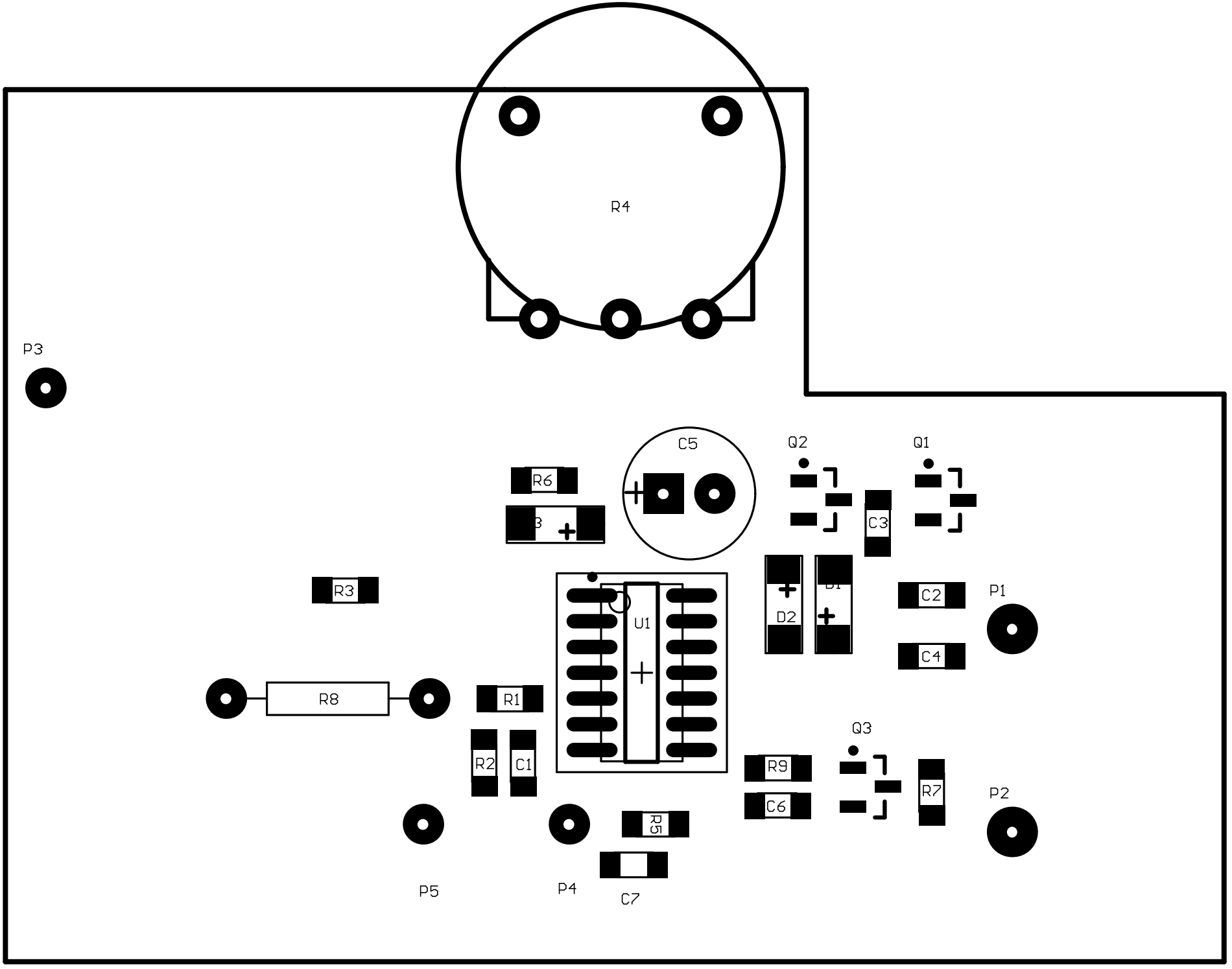
R4
P3
C5
Q2
Q1
R6
C3
R3
U1
D2
C2
P1
C4
R8
R1
Q3
R2
C1
R9
R7
C6
P2
R5
P5
P4
C7